Neu England Kitchen Set
with Metal Levers

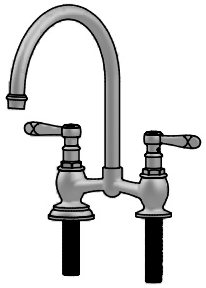

Specification sheet 1.8031.00.6.XX

Product information:

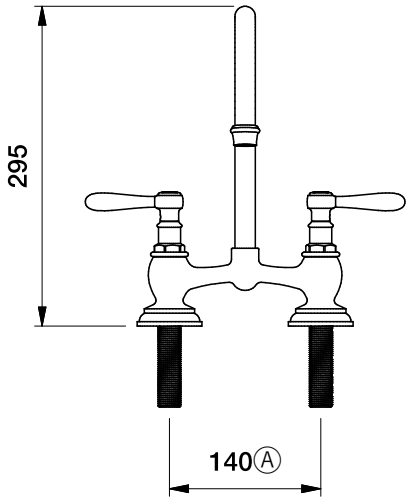

Front view:

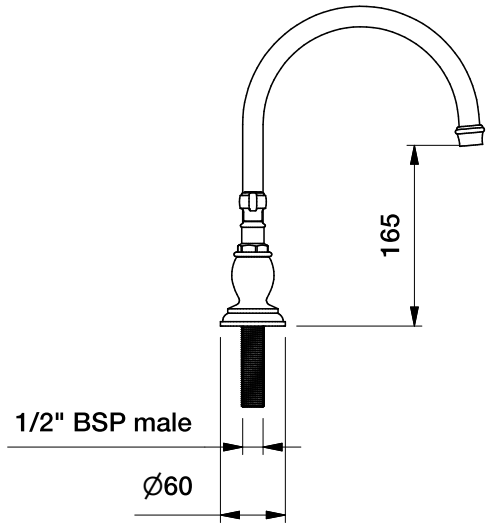

Side view:

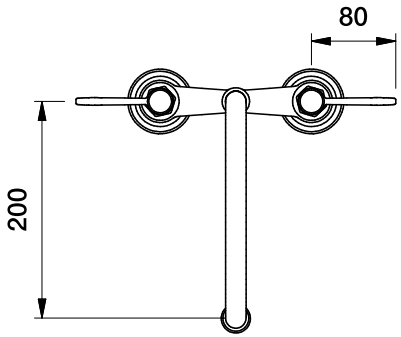

Top view:

Brodware.

Dimensions are subject to change without notice
All dimensions are approximate
A = approximate distance
Copyright © Brodware 2026