Neu England Shower Set
with 150mm Rose & Metal Levers

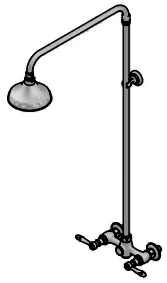

Specification sheet 1.8025.01.6.XX

Product information:

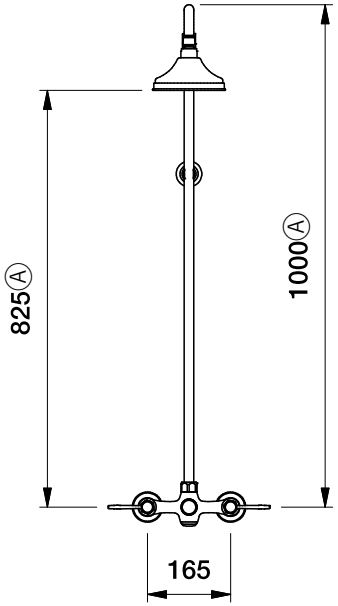

Front view:

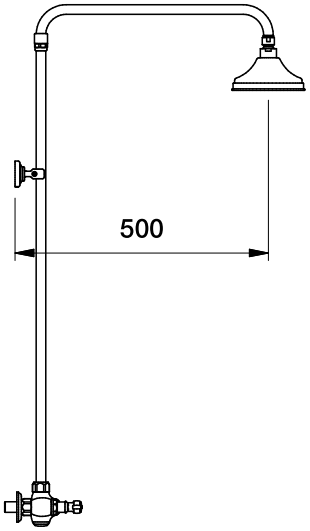

Side view:

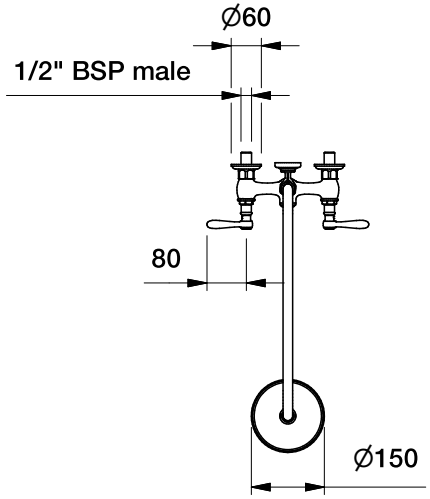

Top view:

Brodware.

Dimensions are subject to change without notice
All dimensions are approximate
A = approximate distance
Copyright © Brodware 2026

Shower rose also available in 200mm and 300mm as a custom order for an additional charge.