Neu England Shower/ Bath Set

with 150mm Rose & Metal Levers

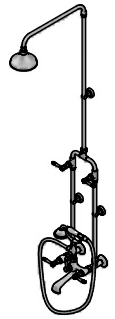

Specification sheet 1.8023.00.6.XX

Product information:

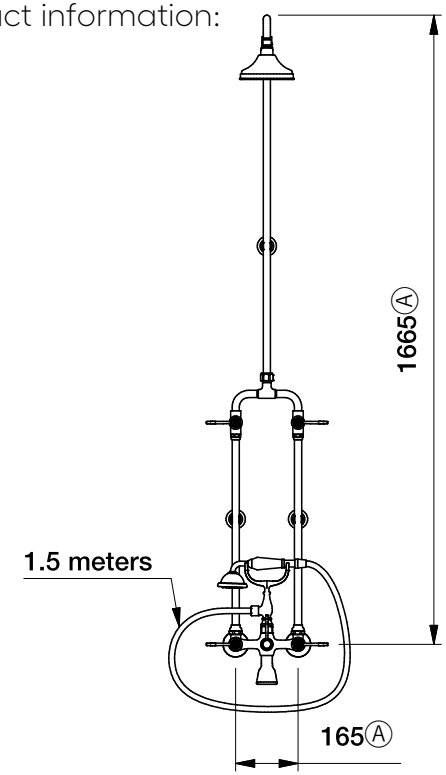

Front view:

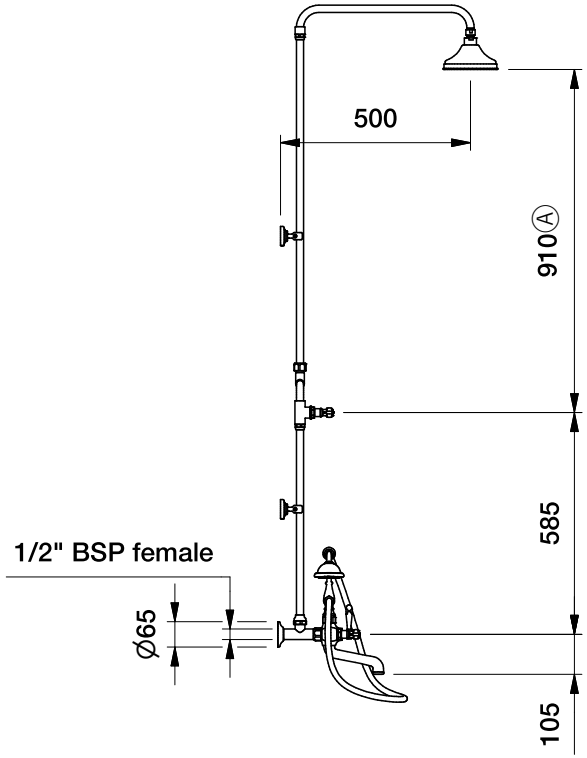

Side view:

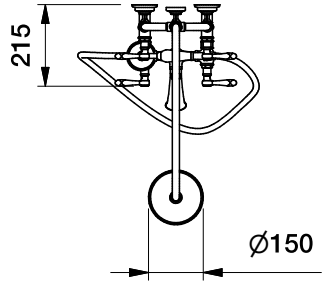

Top view:

Brodware.

Dimensions are subject to change without notice
All dimensions are approximate
A = approximate distance
Copyright © Brodware 2026

Handpieces supplied with white porcelain insert. Custom order required for alternate builds.
PVC hose supplied on Nero (.21) finish orders.
Shower rose also available in 200mm and 300mm as a custom order for an additional charge.