Neu England Hob-Mount Bath Mixer
with Handshower & Metal Levers

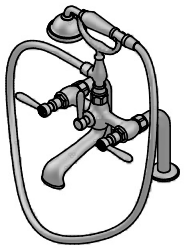

Specification sheet 1.8021.00.6.XX

Product information:

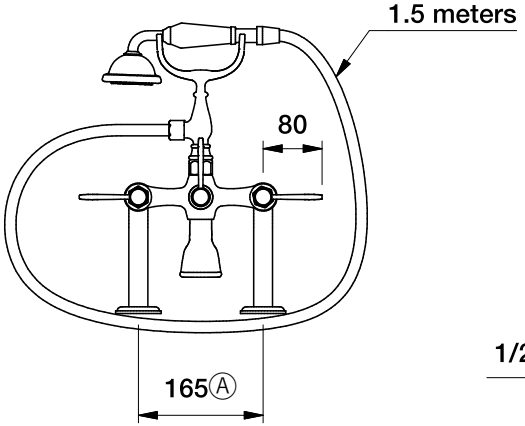

Front view:

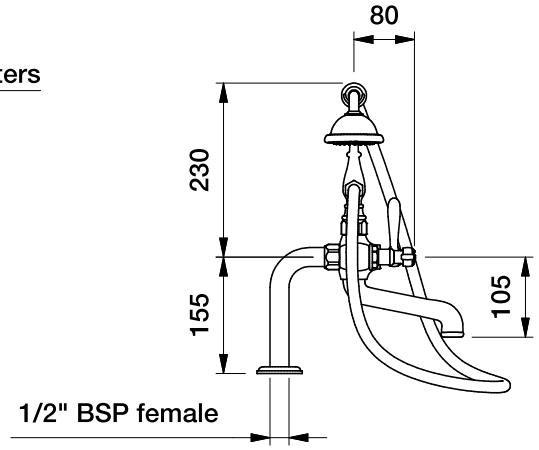

Side view:

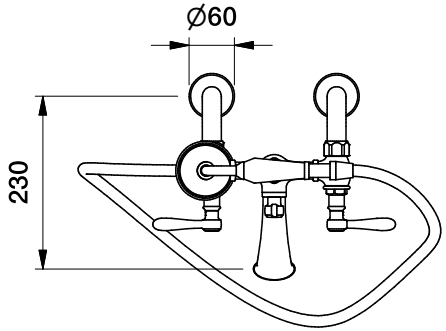

Top view:

Brodware.

Dimensions are subject to change without notice
All dimensions are approximate
A = approximate distance
Copyright © Brodware 2026

White porcelain supplied on handpieces and metal lever on diverters.
Custom order required for alternate builds.
PVC hose supplied on Nero (.21) finish orders