Neu England Shower Mixer Set

with 150mm Rose, Handshower & Diverter

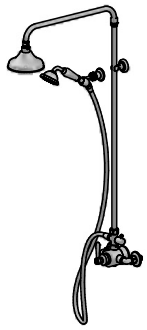

Specification sheet 1.8014.02.6.XX

Product information:

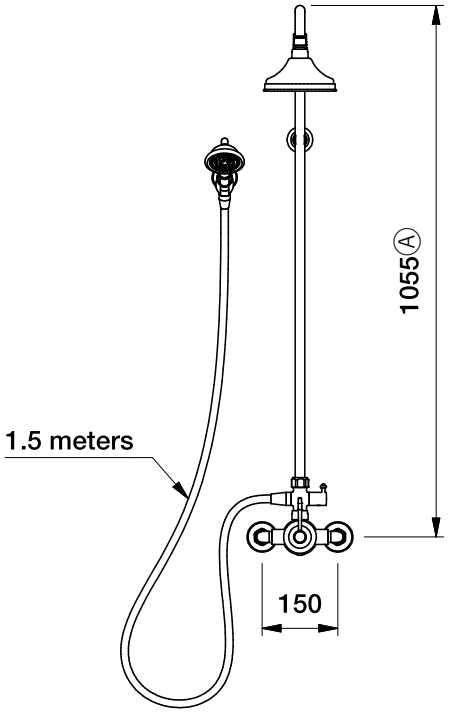

Front view:

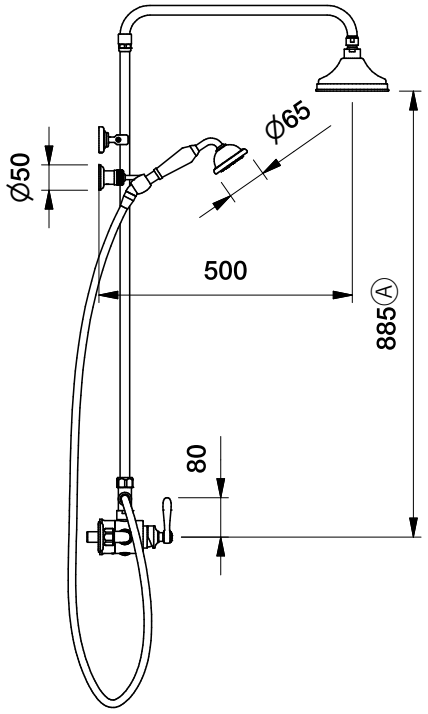

Side view:

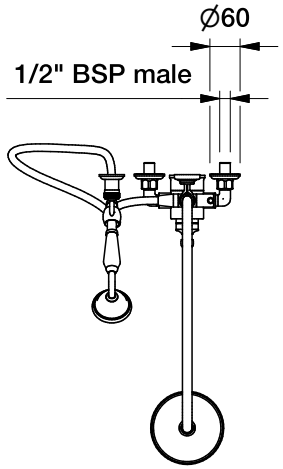

Top view:

Brodware.

Dimensions are subject to change without notice
All dimensions are approximate
A = approximate distance
Copyright © Brodware 2026

Handpieces supplied with white porcelain insert. Custom order required for alternate builds.
PVC hose supplied on Nero (.21) finish orders.