Neu England Shower Set

with 200mm Rose & Metal Levers

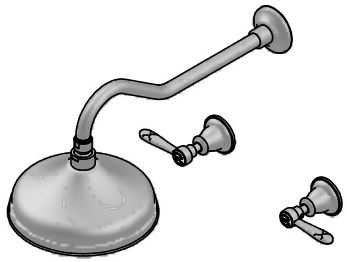

Specification sheet 1.8011.02.6.XX

Product information:

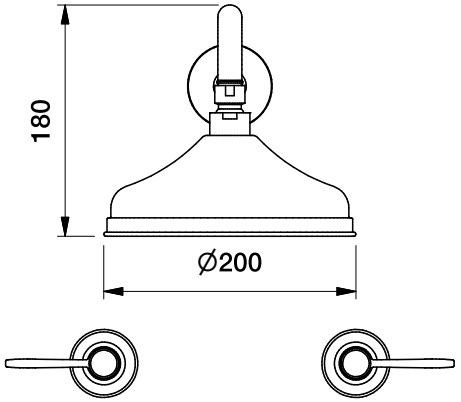

Front view:

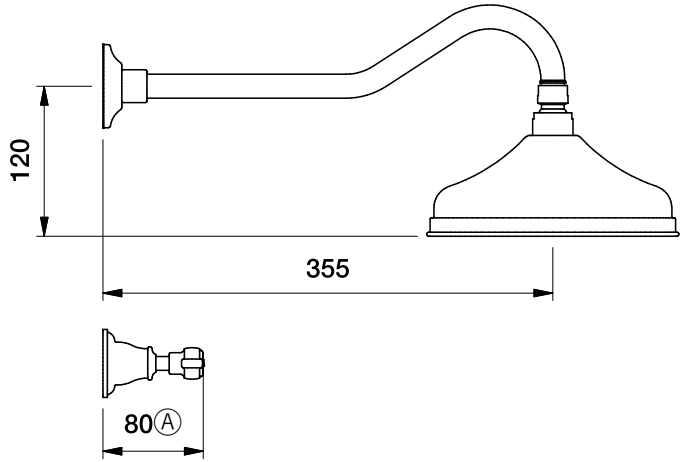

Side view:

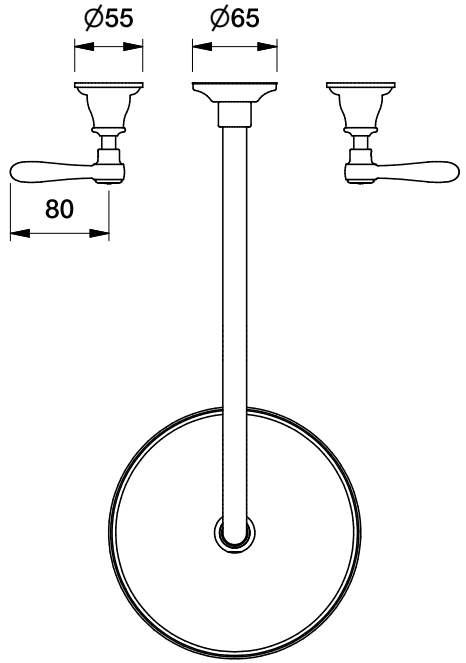

Top view:

Brodware.

Dimensions are subject to change without notice
All dimensions are approximate
A = approximate distance
Copyright © Brodware 2026

Shower rose also available in 300mm as a custom order for an additional charge.