Neu England Shower Set

with 100mm Rose, Extended Arm & Cross Handles

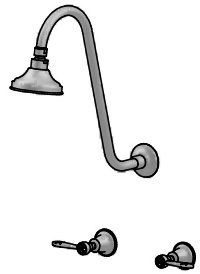

Specification sheet 1.8010.02.6.XX

Product information:

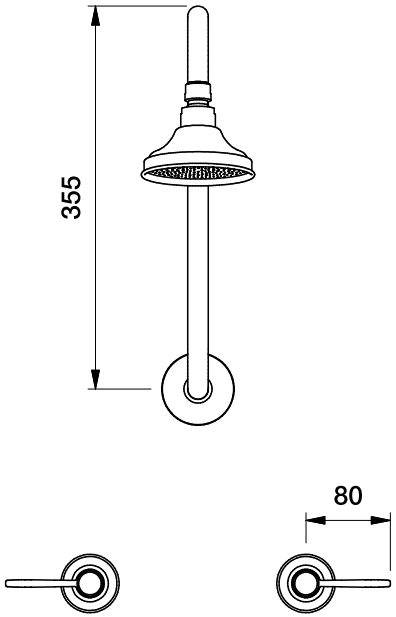

Front view:

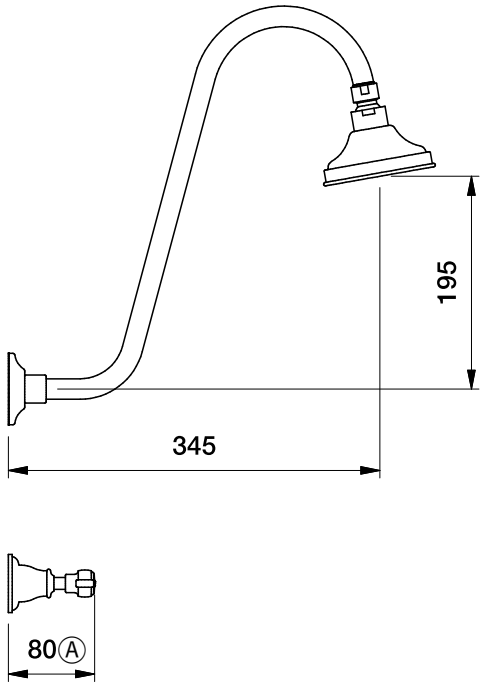

Side view:

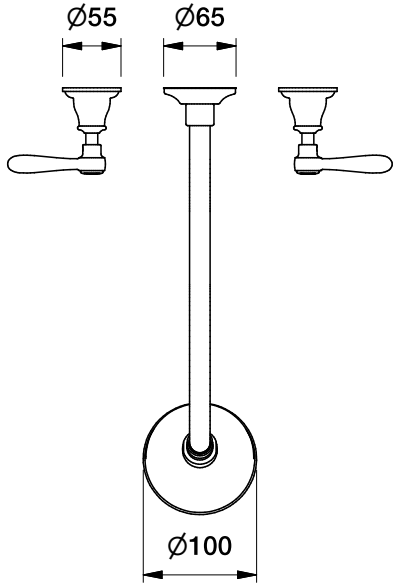

Top view:

Brodware.

Dimensions are subject to change without notice
All dimensions are approximate
A = approximate distance
Copyright © Brodware 2026

Shower rose also available in 150mm and 200mm as a custom order for an additional charge. This product is unavailable in Rumbled Brass (.23) and Nero (.21) finishes Custom order larger rose size for these finishes.