Neu England Wall set

with 220mm Spout and Metal Levers



Specification sheet 1.8006.00.6.XX / 1.8006.50.6.XX Flow controlled variant

Product information:

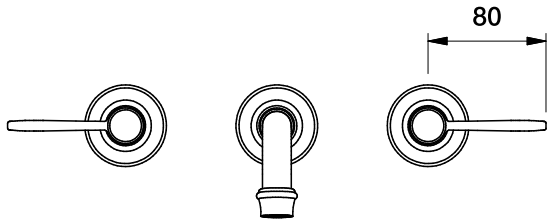

Front view:

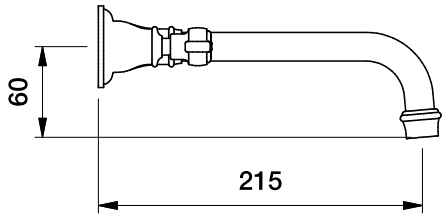

Side view:

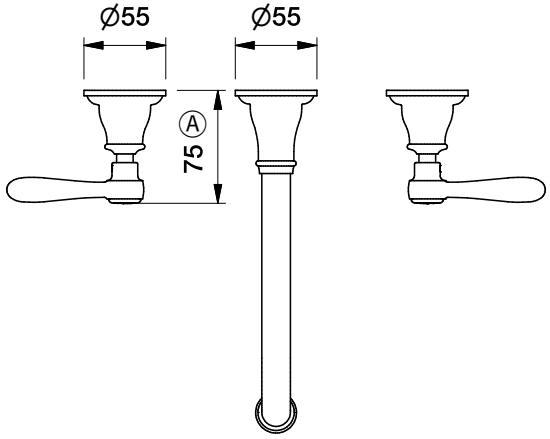

Top view:

Brodware.

Dimensions are subject to change without notice
All dimensions are approximate
A = approximate distance
Copyright © Brodware 2026