Neu England Wall Mixer Set
with 170mm Spout

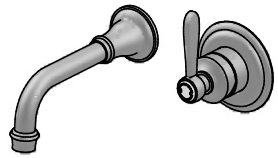

Specification sheet 1.8005.04.6.XX / 1.8005.54.6.XX Flow controlled variant

Product information:

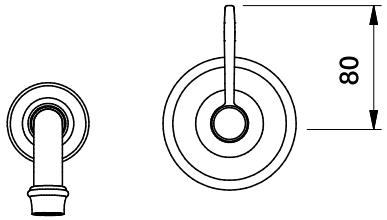

Front view:

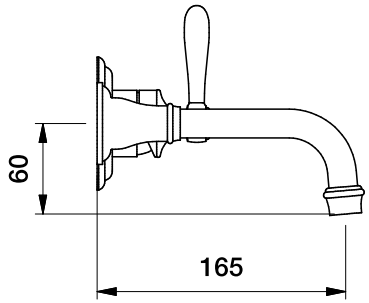

Side view:

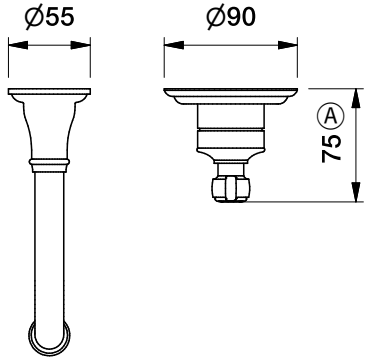

Top view:

Brodware.

Dimensions are subject to change without notice
All dimensions are approximate
A = approximate distance
Copyright © Brodware 2026

Fixed right-hand configuration.
Supplied with Ultrafix installation system.