Brodware

CITY PLUS CISTERN TAP WITH CROSS HANDLE

1.9745.00.2.XX

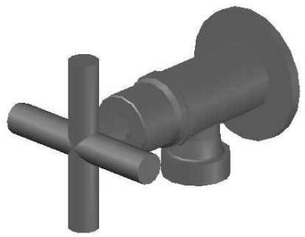

PRODUCT DIMENSIONS:

Front view:

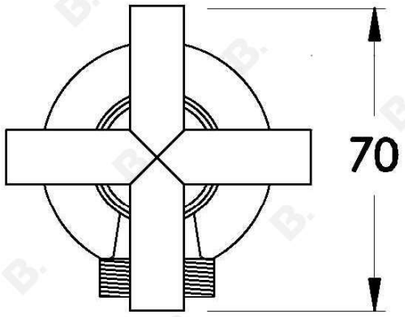

Side view:

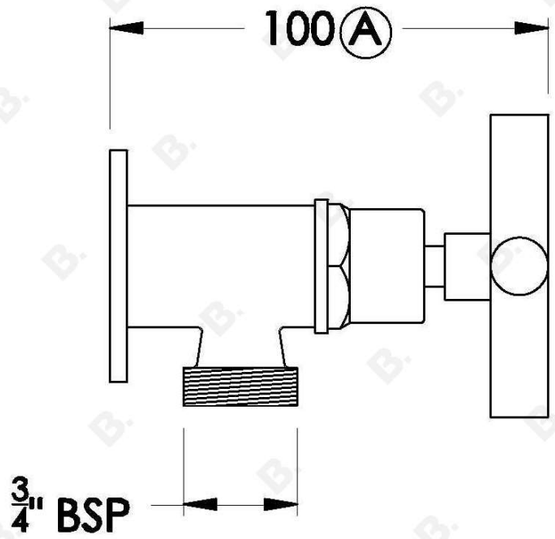

Top view:

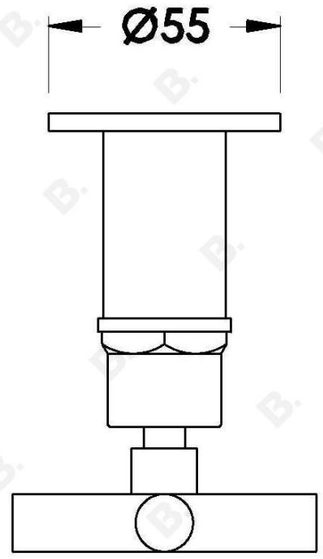

XX suffix indicated finish
Dimensions subject to change without notice
All dimensions are approximate
A Approximate distance
Copyright © Brodware 2020