Brodware

MINIM SHOWER SET

1.9410.02.3.XX

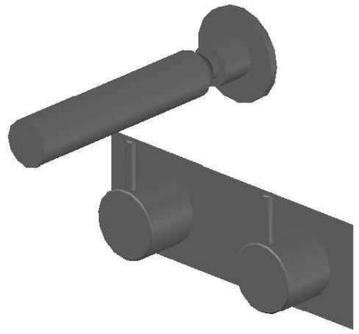

PRODUCT DIMENSIONS:

Front view:

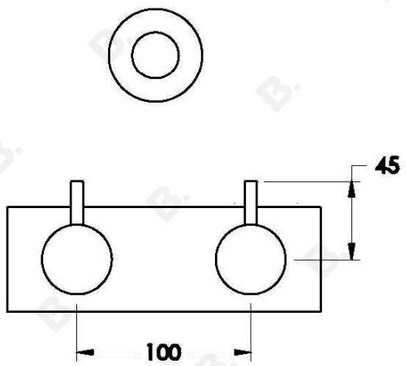

Side view:

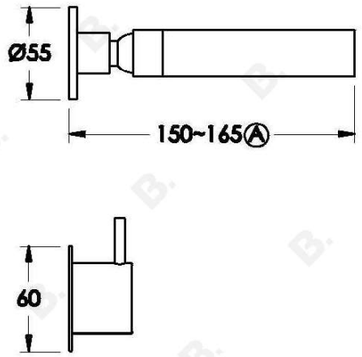

Top view:

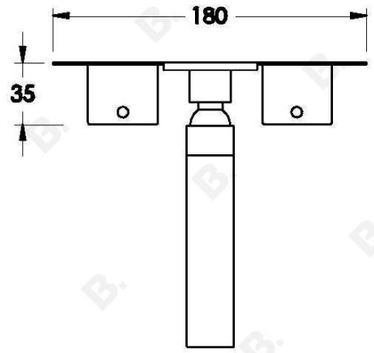

XX suffix indicated finish
Dimensions subject to change without notice
All dimensions are approximate
A Approximate distance
Copyright © Brodware 2020