Brodware

MANHATTAN BIDET MIXER

1.9137.00.3.XX

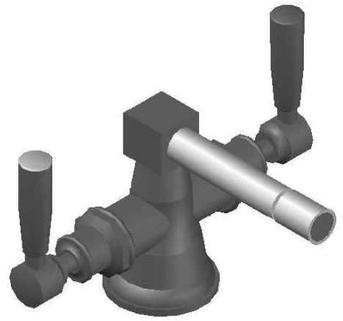

PRODUCT DIMENSIONS:

Front view:

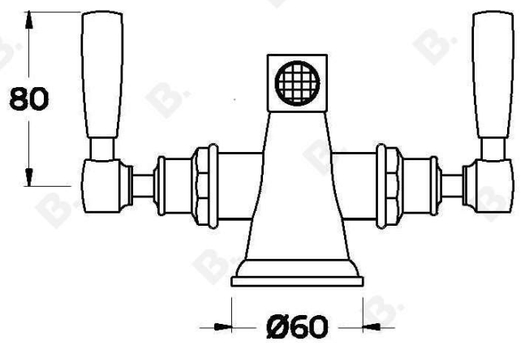

Side view:

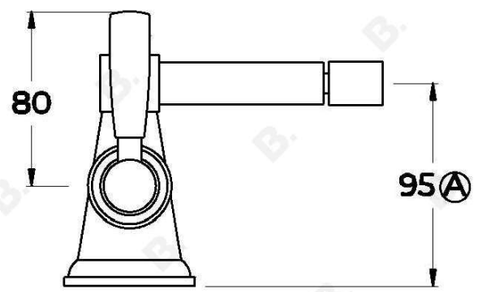

Top view:

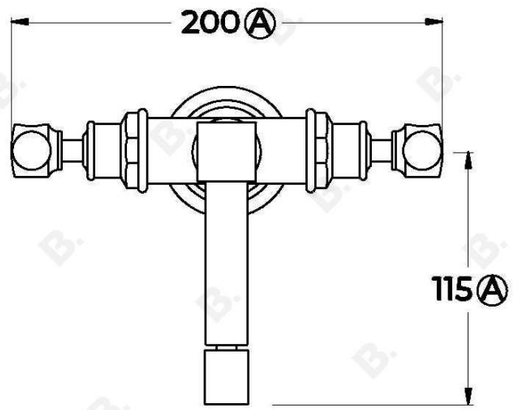

XX suffix indicated finish
Dimensions subject to change without notice
All dimensions are approximate
Ⓐ Approximate distance
Copyright © Brodware 2020