Brodware

YOKATO WALL SET WITH UPSWEPT LEVERS

1.9305.00.4.XX
1.9305.50.4.XX: Flow controlled variant

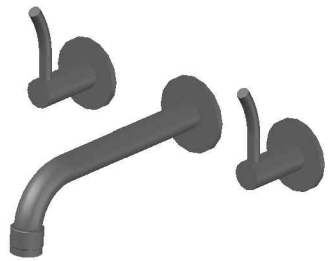

PRODUCT DIMENSIONS:

Front view

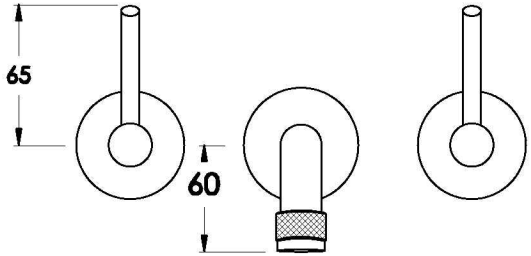

Side view:

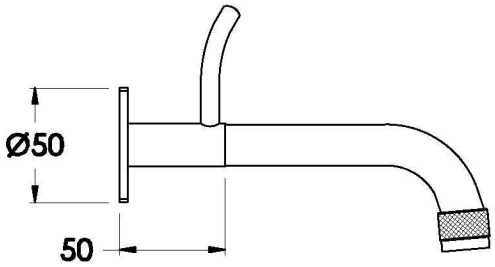

Top view:

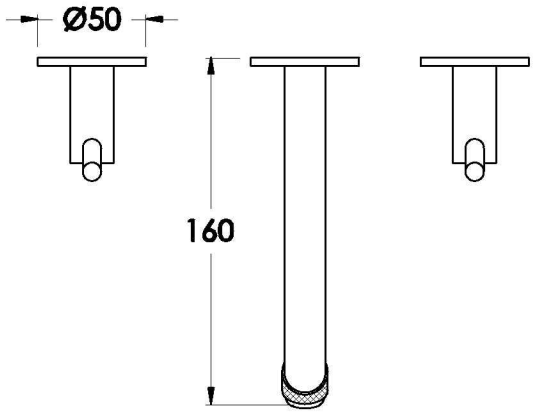

XX suffix indicates finish – SEE WEBSITE FOR COLOUR CODE
Dimensions subject to change without notice
All dimensions are approximate
A = approximate distance
Copyright ©Brodware 2021