Brodware

CITY PLUS SHOWER SET WITH 300MM ROSE AND D LEVERS

1.9711.03.7.XX

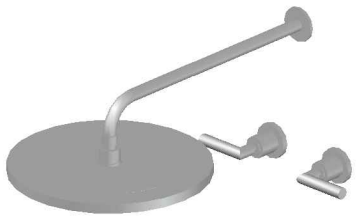

PRODUCT DIMENSIONS:

Front view

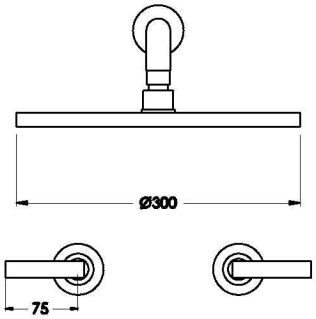

Side view:

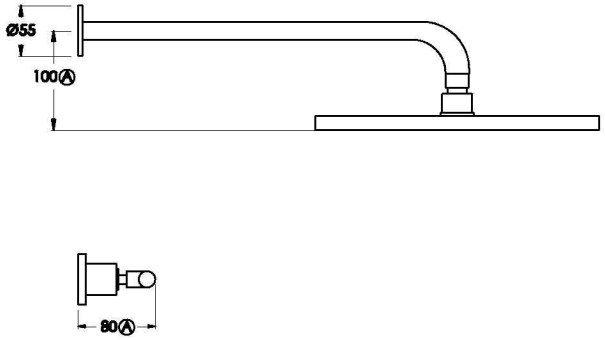

Top view:

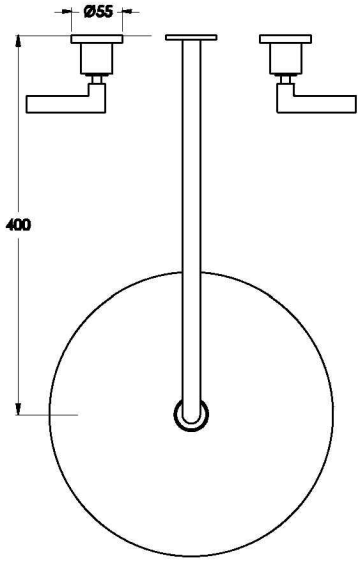

XX suffix indicates finish – SEE WEBSITE FOR COLOUR CODE
Dimensions subject to change without notice
All dimensions are approximate
A = approximate distance
Copyright ©Brodware 2021